FIG. 2 PRIOR ART

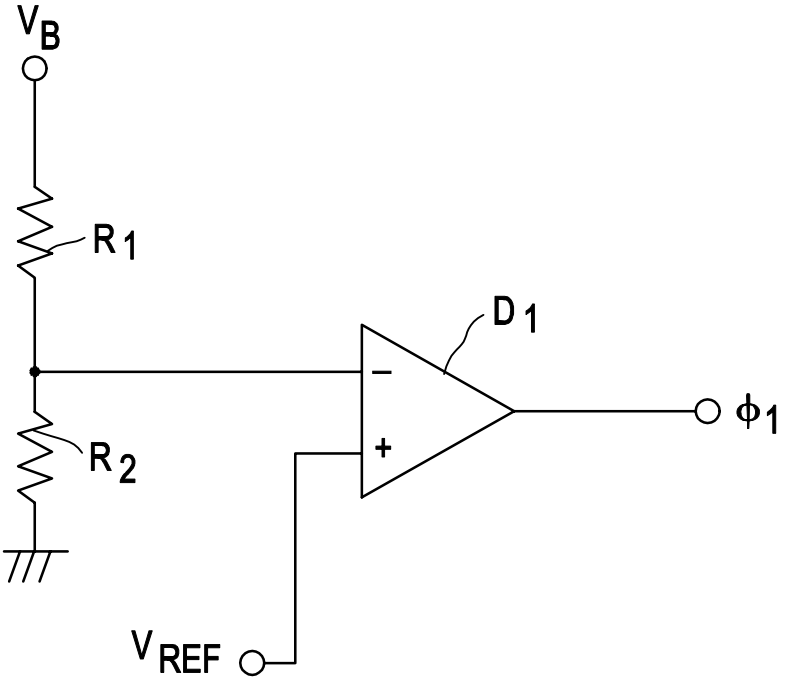
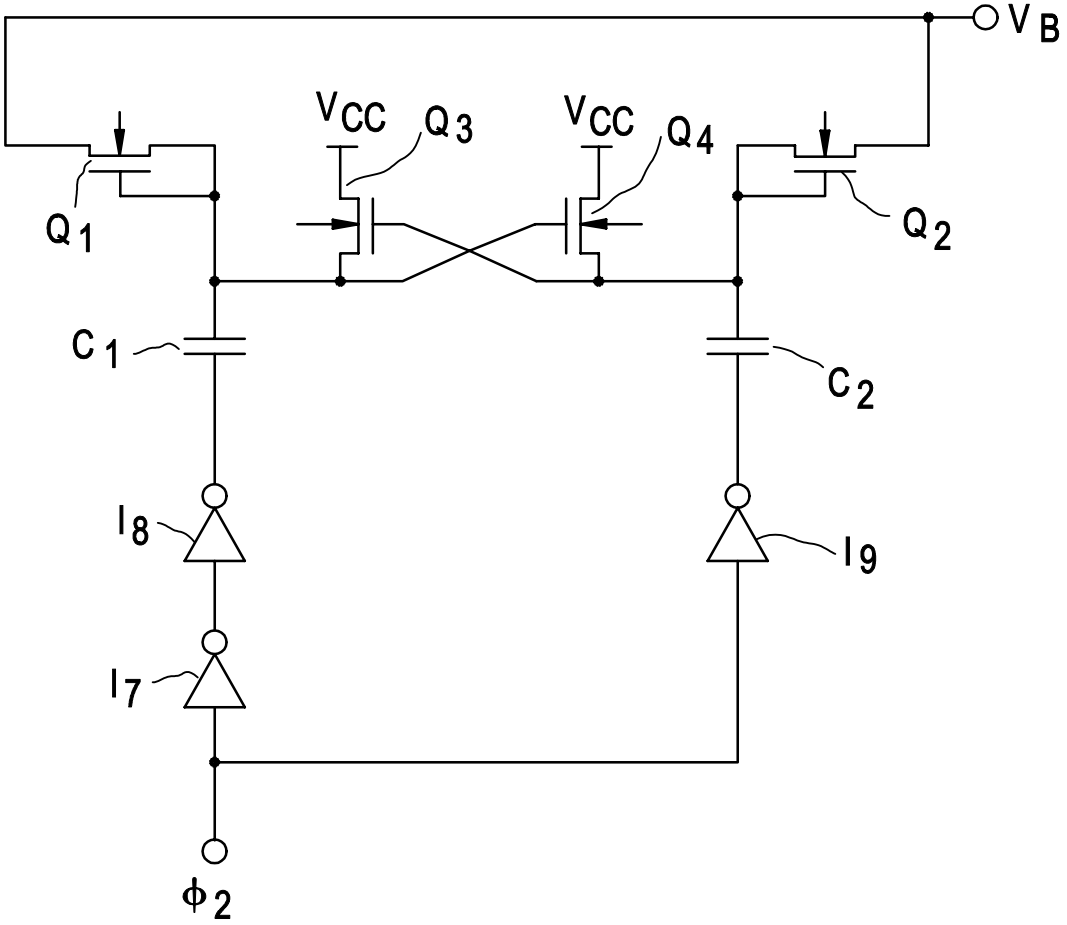
FIG. 3 PRIOR ART